Metropolitan

4500 – Standard
(Center-to-Center 21.25" (540 mm))
4510 – Comfort
(Center-to-Center 22" (560 mm))
4533 – Standard with Anti-Panic Writing Table
(Center-to-Center 21.25" (540 mm))
4534 – Comfort with Anti-Panic Writing Table
(Center-to-Center 22" (560 mm))

Features

Choice of two different seat widths – Standard 21.25" (540 mm) and Comfort 22" (560 mm).

The seat is made of tubular steel with elastic webbing, and the back is made of 0.4" (10.5 mm) bent plywood.

The seat and back are cold-formed self-extinguishing, CFC free polyurethane foam, with the average thickness of 3" (80 mm), with the density of the seat being 3.5 ft./lbs.^{3} (55 kg/m^3) and the back being 2.5 ft./lbs.^{3} (40 kg/m^3).

Lower back protector in gray powder coated metal.

Flip-Up seat movement engaged by gravity.

Armrest comes standard fully upholstered.

The Anti-Panic Table (fixed to the back) is made of post-formed scratch resistant bi-laminated wood composite with rounded front edge and the sides and back edges are 2 mm thick ABS. 11.75" (300 mm) and 1" (30 mm) thick.

Options

Fold-away Anti-Panic writing tablet in Black High Pressure Laminate (#**HPL**) that is 0.3" (8 mm) thick.

Anti-panic post-formed, scratch resistant table, 11.75" (300 mm) deep and 1" (30 mm) thick, with 2 mm ABS edge band on sides and back.

Wood arm cap in natural beech.

Textured Black polypropylene arm cap.

Two different full to the floor arm options.

Compact narrow arm with depth of 16.75" (425 mm).

Full wood back panel in Natural Beech.

Lower back wood back protector in Natural Beech.

Under seat in beech plywood natural color.

Micro spring seat for added comfort.

Place and row embroidered or hot glued numbering (not available on the wood under-seat and side panel).

Custom color for steel frame.

Custom wood stain.

Movable beam in one, two, and three configuration beams, available with suction cups, glides, or casters.

Cup holder.

Row terminal light.

Metropolitan
4500
Standard (Center-to-Center 21.25" (540 mm))

Fully upholstered arm, lower back protector in Black powder coated metal.

Product Pricing Available Upon Request

Metropolitan
4510
Comfort (Center-to-Center 22" (560 mm))

Fully upholstered arm, lower back protector in Black powder coated metal.

Product Pricing Available Upon Request

Metropolitan
4533
Standard (Center-to-Center 21.25" (540 mm))

Fully upholstered arm, lower back protector in Black powder coated metal.
Anti-panic table fixed onto the back in Black post-formed laminate.

Product Pricing Available Upon Request

Metropolitan
4534
Comfort (Center-to-Center 22" (560 mm))

Fully upholstered arm, lower back protector in Black powder coated metal.
Anti-panic table fixed onto the back in Black post-formed bi-laminate.

Product Pricing Available Upon Request

Metropolitan

STANDARD

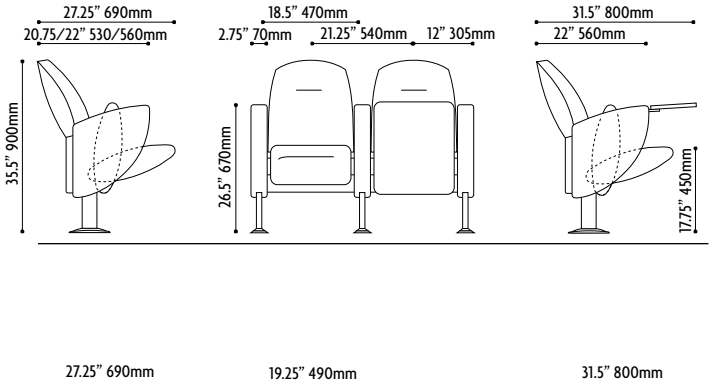

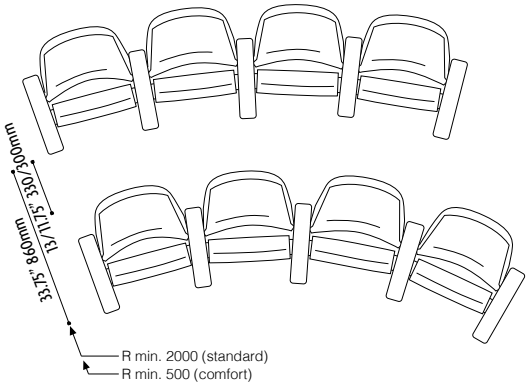

COMFORT

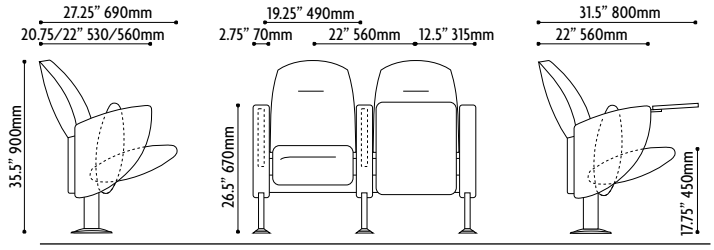

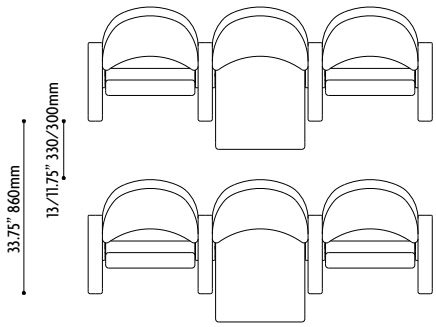
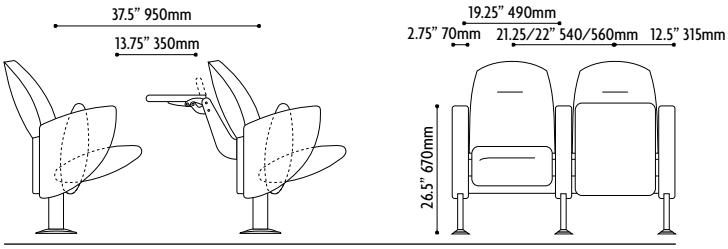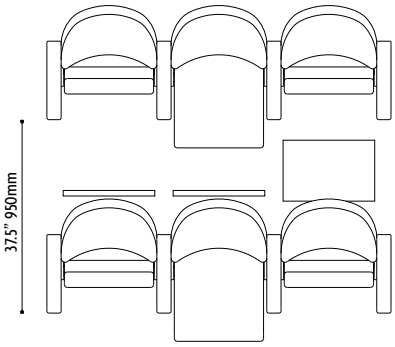
WITH TABLE FIXED ON THE BACK